PWSHK-H40-000

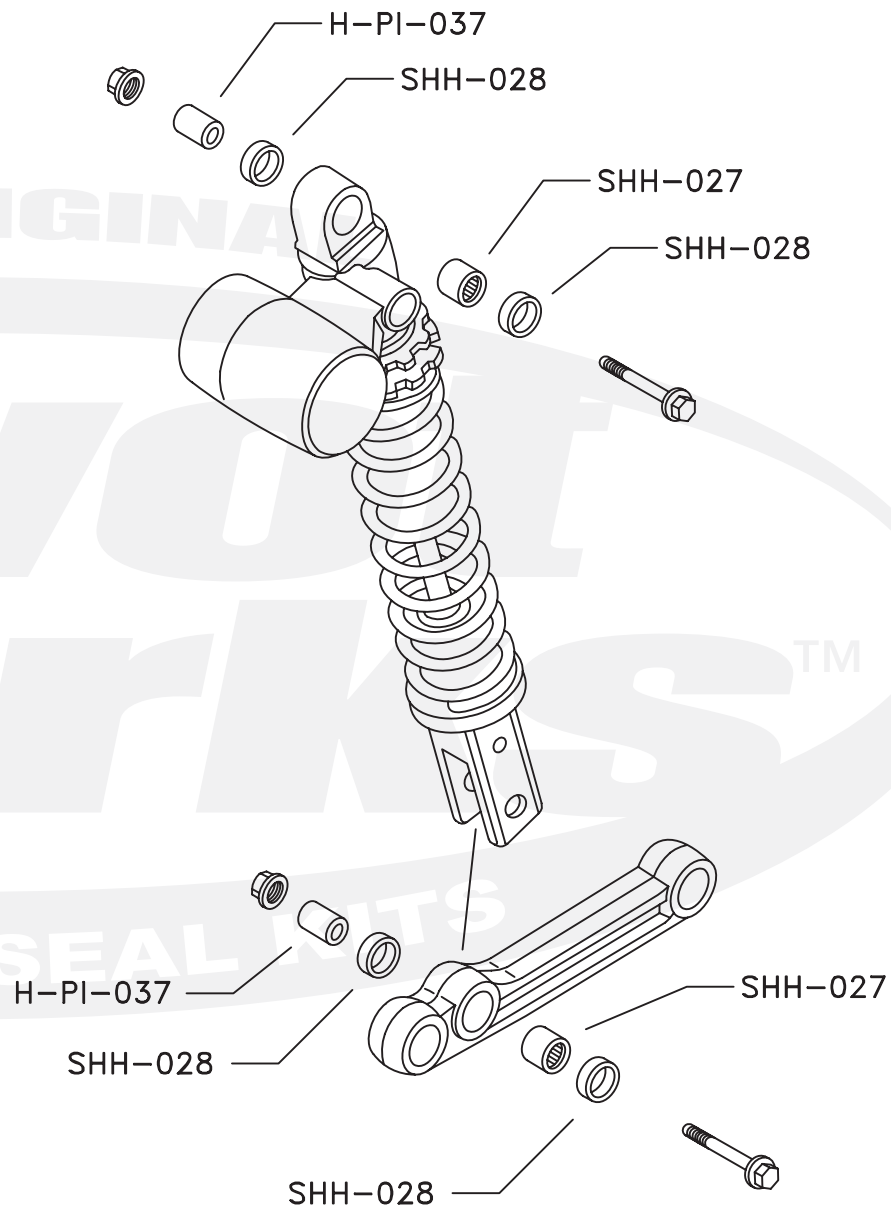

Qty.	Part Number	Description
2	H-PI-037	Pin
2	SHH-027	Bearing
4	SHH-028	Seal